NAKAMICHI

10.2" OVERHEAD SCREEN WITH DVD

NAK102

Contents

Safety Information **2**
DVD Player Features **4**
DVD Video Features 4
Controls **5**
Monitor Stowed View 5
Monitor Open View 6
Remote Control 7
Basic Operation **9**
Open the monitor 9
Stow the monitor 9
Handling disc 9
Turn the player on 9
Turn the player off 10
Adjust the display 10
Care and Maintenance 10
Use the remote control 11
Replace the battery in the remote control 11
Use the Harddisk 12
Play **13**
Play DVD disc 13-14
Play Audio CD disc 15
Play MP3 disc 15-16
Play USB device and SD/MMC card 16
Use FM transmitter 16
Installation and Wiring **17**
What's in the box 17
Before you begin 17-18
Mounting and Wiring Precautions 18-19
Installation procedure 19
Wiring diagram 20
System Setup **21-22**
Specifications **23**
Troubleshooting **23-24**

Safety Information

- Thank you for buying the Roof Mount LCD Monitor with DVD player. Please read this manual carefully before using the player in order to get the most out of all the features and functions. Keep this manual in a safe place, as it can be a valuable tool in helping you to understand all the features and functions.
- Do not operate the unit in any way other than described within this manual. Failure to follow the instructions within the manual will invalidate your warranty.
- SAFETY FIRST! Do not install the display where it may (i) obstruct the driver's vision, (ii) impair the performance of any of the vehicle's operating systems or safety features, including airbags, or (iii) impair the driver's ability to safely operate the vehicle.
- When using the system, make sure you are firmly secured by your seat belt to ensure you do not accidentally hit your head on the screen during sudden braking or other incidents. If you are ever in an accident, injuries can be more severe if the seat belt is not properly buckled.
- Do not attempt to install or service your display by yourself. Installation or servicing of the display by persons without training and experience in electronic equipment and automotive accessories may be dangerous and could expose you to the risk of electric shock or other hazards.
- Be careful not to drain the car battery while using the unit with the car engine stopped. To avoid draining the battery, it is suggested that the vehicle engine always is running while using the unit.
- Do not disassemble or alter the unit in any way. Failure to do so can cause damage to the unit and invalid the warranty.
- Never clean the surface of the screen with chemical solvent or corrosive detergent, which may cause permanent damage to the TFT LCD screen.
- Avoid installing the unit wherever is under direct sunlight or near hot air vent. Please note that the normal working temperature of the unit is between -5℃ to +50℃. If the internal temperature of the vehicle is extremely high, a short cooling down period is necessary before operating the unit.
- If the temperature inside the car is very low and the monitor is used soon after switching on the heater, moisture may form on the panel of the unit. Turn off the unit immediately! Failure to do so may cause the internal components to short. Allow the unit to rest for about one hour to allow the condensation to disappear before continue operation.
- In extremely cold temperatures, the movement of the picture may be slow and the picture may be dark. It is not a malfunction. The unit will work normally once it reaches its operating temperature.
- Do not drop or hit the LCD panel with a hard object, as it may cause permanent damage to the LCD panel. Should LCD panel break, avoid touching glass and fluid. If do, please clean it with plenty of water and ask for medical attention immediately.
- Due to different car specifications, please kindly ensue that the display monitor is properly located and not obstructing the air-conditioning vent.
- Avoid inserting any foreign objects into the slot of the disc Player. Failure to observe this may cause malfunction due to the precise mechanism of this unit.
- Protect your disc. When you leave the car, be sure to eject the disc from this unit and store it separately away from direct sun light.
- Heat and humidity may damage the disc and you may not be able to play it again.
- Use the supplied screws to fix the monitor Metal Mounting Plate.

DVD Player Features

This player is a Roof Mount 10.2" TFT-LCD Color Display with DVD player that can be used as a stand-alone display, or can be integrated into a mobile multimedia system. This player has the following features:

- ✧ 10.2" TFT-LCD color monitor(16:9)
- ✧ Roof Mounting Application
- ✧ Pixel(dots):800x3(RGB)x480
- ✧ Wide Viewing angle(up/down/left/right):45/65/65/65
- ✧ NTSC and PAL Compatible
- ✧ Adjustable Contrast / Brightness / Color / Tint
- ✧ Manual Viewing Angle Adjustment
- ✧ Vertical Angle Adjustable: up/down<120°
- ✧ White LED Dome Light
- ✧ Automotive Startup Protection
- ✧ Built-in IR Transmitter
- ✧ IR Remote Control
- ✧ On Screen Display
- ✧ 2xAV Input
- ✧ 1xAV Output
- ✧ Slot-in DVD mechanism
- ✧ Support SD/MMC card and USB
- ✧ FM Transmitter for listening the audio from your car audio system via FM radio receiver (setting frequency: 87.5MHz--108.0MHz).
- ✧ Capability to read: DVD Format/DVD-ROM/DVD±R/DVD±RW/CD-DA/CD-RW/CD-R/CD-ROM(XA) /MP3/WMA/VCD/SVCD/JPEG/DIVX/MPEG4 .

Note:*Multi-session CDs and 320kbps WMA files can't be played.*

DVD Video Features

DVD drive that supports the following formats:
DVDs(12cm), video CDs(12cm), audio CDs(12cm), MP3 CDs(12cm)

- Playback of CDs with two recorded sessions (one audio and one data)
- Multi-sound: DVD audio that supports up to seven languages per film
- Subtitles: support up to 7 languages
- The playback of MP3 music files stored on a CD-R/CD-RW disc or USB or SD or MMC Card device

Controls

Monitor Stowed View

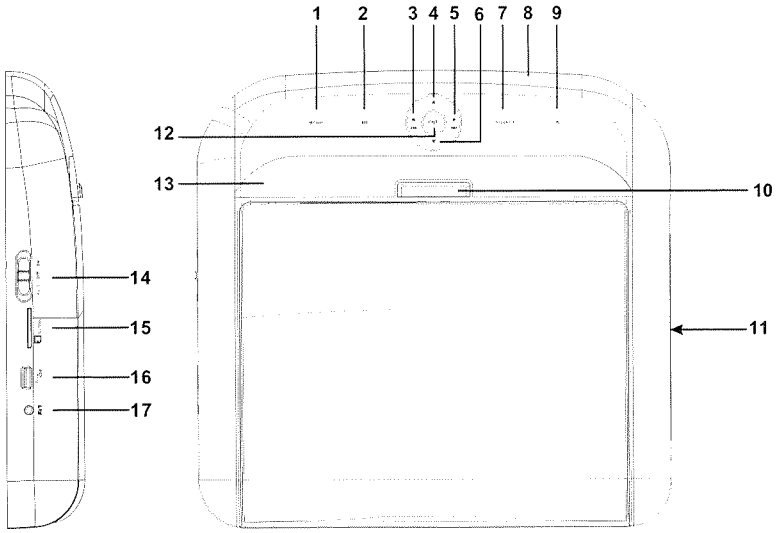

Item	Name	Function or Control
1	**MENU**	Touch and hold to display the OSD menu , touch again to close the OSD menu . On DVD mode , touch to display DVD list, touch again to close the DVD list .
2	▶II	Play or pause .
3	◀ ⏮	Previous Chapter or Track / Navigation Left ; Press and hold to fast reversef at 2x,4x,8x,16x , 32x and normal speed.
4	▲	Navigation Up.
5	▶ ⏭	Next Chapter or Track / Navigation Right ; Press and hold to fast forward at 2x,4x,8x,16x , 32x and normal speed.
6	▼	Navigation Down .
7	**SOURCE**	Selects the video input source:AV1,AV2 or DVD; On DVD mode,touch and hold to switch the

		mode between SD/MMC and USB .
8	IR Window	Receives IR signals from the remote control or sends IR signals to IR wireless headphone.
9	▲	Eject the disc.
10	Panel open switch	Press to release the monitor Panel.
11	Disc slot	Insert the disc.
12	**ENT.**	Enter / Confirm choose.
13	Dome light	To illuminate in the car.
14	Dome light Switch	Turns on/off the dome light . When the switch is set to AUTO , the dome light turns on when the door is open .
15	SD/MMC card slot	Insert the SD card or MMC card.
16	USB socket	Connect USB device.
17	AV 1 IN socket	External equipment audio/video in socket.

Monitor Open View

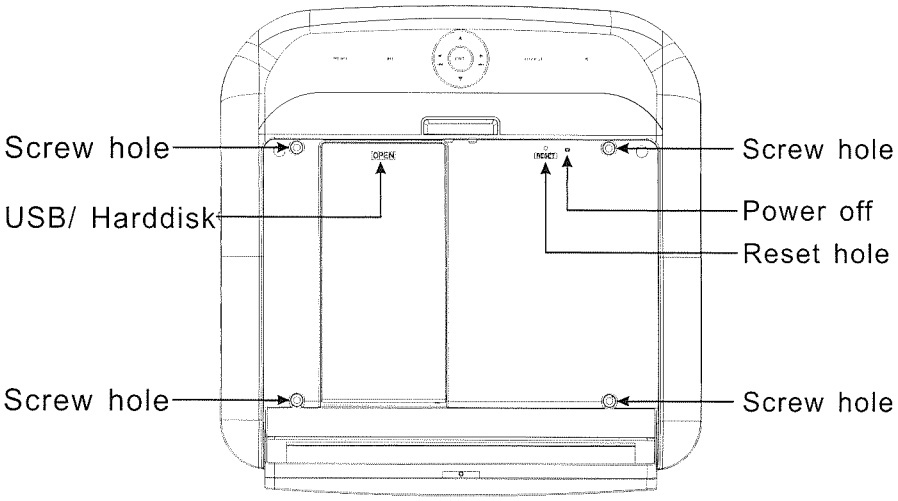

Remote Control

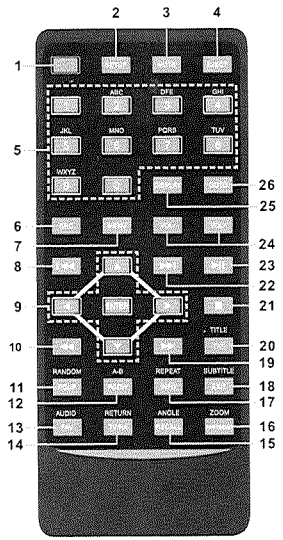

Item	Name	Function or control
1	⏻	Turn on or turn off the player.
2	**SETUP**	Press to access the setup menu to modify the DVD player settings.
3	**MUTE**	Turn the sound on or off.
4	**EJECT**	Eject the disc.
5	**0-9 Number key**	Press to enter numbers directly, such as for settings or track numbers.
6	**SRC**	Selects the video input source: AV 1 , AV 2 or DVD; On DVD mode, press and hold to switch between SD/MMC and USB mode .
7	**MENU**	Press and hold to display the OSD menu , press again to close the OSD menu . On DVD mode , press to display DVD list, press again to close the DVD list .
8	⏮	Press to go to the previous chapter or track .
9	**Arrows and ENTER**	Navigation Up/Left/Right/Down and confirm choose .

10	◀◀ **Fast reverse**	Press to fast reverse playback at 2x, 4x, 8x,16x and 32x speeds.
11	**RANDOM**	Press to play chapters or tracks in random order.
12	**A-B**	Press to repeat playback from point A to point B.
13	**AUDIO**	For a DVD: Change the language during play . For a VCD/CD: Change audio channel (left, right, stereo) during playback .
14	**RETURN**	Press to return the main menu, press again to return the last position of playback.
15	**ANGLE**	Press to select a different filming angle. This feature only works if the DVD is recorded with multiple angles.
16	**ZOOM**	Press to set the zoom for movie viewing.
17	**REPEAT**	Press to repeats the track or the entire disc.
18	**SUBTITLE**	Press to select and turn on subtitles during playback.
19	**▶▶Fast forward**	Press to fast forward playback at 2x, 4x, 8x,16x and 32x speeds.
20	**TITLE**	Press to view the DVD disc's title menu.
21	**■ Stop**	Press to stop playback, press **▶II** or **ENTER** button to start playing at the last position; Press this button twice to fully stop playback, press **▶II** or **ENTER** button to start playing at the beginning of DVD.
22	**▶▶I**	Press to go to the next chapter or track.
23	**▶II**	Play or pause .
24	**VOL - / +**	Press to decrease / increase the volume.
25	**DISPLAY**	Press to display the playback information (such as title, chapter, track and time).
26	**GOTO**	Press to start playback at a selected chapter, track or time.

Basic Operation

Open the monitor

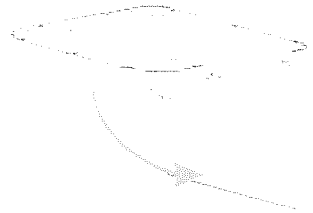

1. Press the Panel open button to lower the overhead monitor screen.
2. Gently swing the LCD down and adjust the angle for viewing.

CAUTION: *The LCD opens to a maximum angle of 120° degrees. Do not attempt to open it further.*

Stow the monitor

Gently push the back side of the display panel until it clicks into the overhead housing.The monitor turns off automatically when you return it to the closed position.

Note : *When closing the display panel , do not let cords or other items get caught between the display and the overhead housing . Doing so can seriously damage the screen.*

For your safety, close the LCD panel when you are not using it.

Handling disc

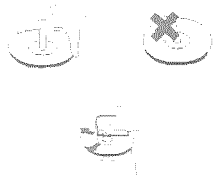

- To keep a disc clean, do not touch the play side (non-label side).
- Do not attach sticky notes to or put tape on a disc.
- Keep discs away from direct sunlight and heat.
- Store discs in a protective disc case.
- To clean the disc , wipe the disc outwards from the center with a clean cloth.

Turn the player on

1. Use the system with the vehicle running or with the ignition key switch in the "accessory" position .
2. To lower the screen , press the Panel Open button and move the screen into a viewing position. The system will power on automatically .
3. Touch **SOURCE** icon to switch the mode.
   Note: *You cannot insert a DVD into the slot if you have selected an alternate audio-video source (AV IN1 ,AV IN2).*

Turn the player off

Close the monitor or press the power button on the remote control to turn the player off .
If a disc is playing when you turn the power off and back on again, the player continues playback from where you stopped.
Note: *Once the player is turned off, you cannot eject a disc in the player.*

Adjust the display

1. Touch and hold the **MENU** button to display adjust menu (OSD)

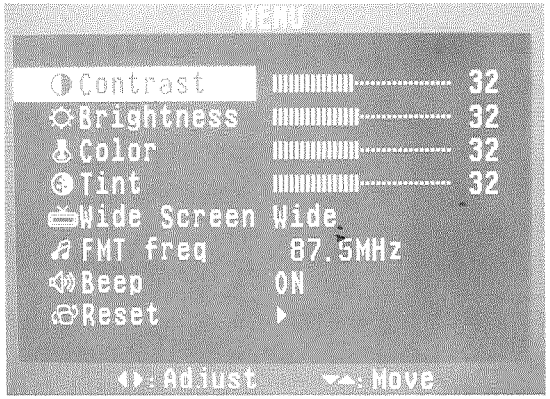

2. In the OSD MENU , press ▼or ▲ button to sequentially select each menu item .

Contrast	Adjusts the differences between the light and dark areas of the image
Brightness	Makes the whole image lighter or darker
Color	The Color is adjustable on DVD mode while on AV1/AV2 mode,the Color is adjustable only when signal exsits.
Tint	Adjusts the intensity of the color when in NTSC mode
Wide Screen	Selects the aspect ratio of the image wide ,normal .
FMT Freq	Select the frequency for FM transmitter:87.5MHz-108.0MHz.
Beep	Select the beep sound when touch each icon or button .
Reset	Returns all menu values to their default settings.

3. Press the ◄ or ► button to change the values of selected option.

Care and Maintenance

Cleaning the monitor

- Use a clean, soft, dry cloth to gently wipe dust and dirt from the screen.
- Do not use benzene, thinner, car cleaner, or other cleaners.
- These substances may damage the monitor system or cause the paint to peel.
- The surface of the LCD can be easily scratched. Do not rub it with anything abrasive.

Servicing the monitor

In the event that trouble arises, never open the monitor case, disassemble the player or attempt to repair it yourself. The internal parts are not serviceable by user. Opening any components will void the warranty.

CAUTION:
Changes or modifications to this product not approved by the manufacturer may void the warranty.

Cleaning the remote control

Use only a clean, soft, damp cloth to clean the remote control. Do not use lighter fluid, methyl alcohol or other solvents.

Cleaning discs

Before playing a disc, wipe it outwards from the center with a clean, soft cloth.

Use the remote control

- Use the remote control only inside the vehicle.
- Use the remote control no further than ten feet (three meters) from the sensor.
- Direct sunlight (or a very bright light) reduces sensitivity to remote signals. Do not use the player in direct sunlight.
- Any object than comes between the infrared sensor and the remote control may disrupt reception.

Replace the battery in the remote control

The battery needs changing when the buttons on the remote stop working or when you have to move close to player for the remote to work.

Precautions

- Dispose of used batteries property.
- Do not dispose of used batteries throwing them into fire. If you do so, they may explode.
- Do not short the positive (+) and negative (-) terminals.
- Keep the battery and its holder away from young children.They may

choke on the battery while attempting to swallow or chew on it.
Note: *The battery type must be CR2025. Do not replace with any other battery type.*

Procedure

1. Turn the remote up-side-down.
2. Simultaneously slide the battery latch in the direction of the arrow and pull the battery holder out of the slot.
3. Remove the old battery.
4. Place the new battery in the slot with the plus(+) side up.
5. Push the battery holder back into the slot until it locks in place.

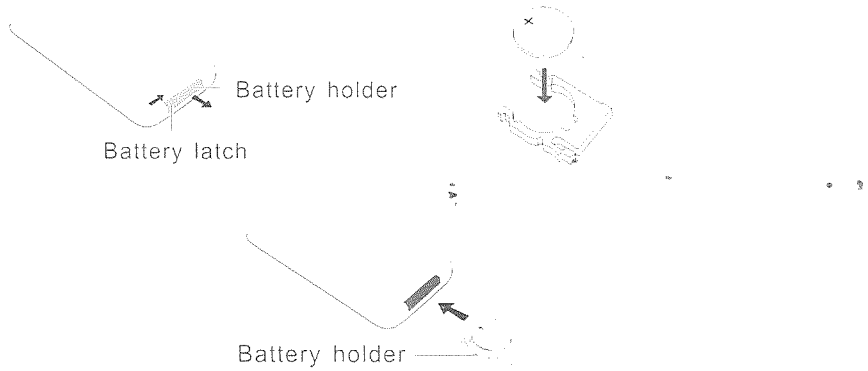

Use the Harddisk

Press **OPEN** icon on the harddisk placed board to lower the harddisk placed board .
Gently swing the board and adjust the angle for connect the harddisk.

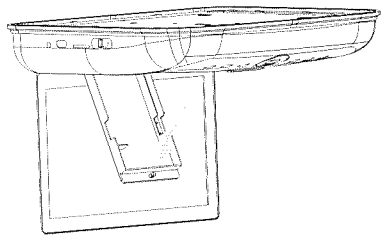

Play

1. On DVD mode , insert a disc into the disc slot when the screen display " NO DISC ". When the disc was inserted , "LOADING" displayed , the system will read and play the disc automatically .
2. Press the **EJECT** button to eject the disc.
3. If the disc have not been take away in 10 seconds , the system will slot it in automatically and play again.

Play DVD disc

Access the root menu

A DVD is divided into titles and chapters. The root menu shows the contents of the disc. Some DVD disc only allow you to select disc playback options from the DVD root menu.
To access the root menu of the DVD, press the **RETURN** or **TITLE** button on the remote control during playback.

Status information

To view status information about the current viewing session, press the **DISPLAY** button continuously to cycle through the following information.

TITLE ELAPSED
TT 02/06 ch 15/18 1:20:10

TITLE REMAIN
TT 02/06 ch 15/18 0:13:50

CHAPTER ELAPSED
TT 02/06 ch 15/18 0:02:20

CHAPTER REMAIN
TT 02/06 ch 15/18 0:01:10

Chang languages

Note:
All audible languages must be pre-recorded on the DVD. Some DVD disc only allow language access through the DVD menu.

- To change the audible language, press the **AUDIO** button on the remote control. The player displays the current language number and name, and the total number of languages available.
- To cycle through all available languages, continue pressing the **AUDIO**

button on the remote control. The audio information will disappears automatically after three seconds.

Use subtitles

Language subtitles are normally off.

Note:*Subtitles must be on the DVD. Some DVDs only allow subtitle access through the DVD menu.*

- To turn subtitles on, press the **SUBTITLE** button.The player displays the current language number and name, and the total number of languages for which subtitles are available.
- If the DVD provides subtitles in multiple languages, continue pressing the **SUBTITLE** button to change the subtitle language.
- To turn subtitles off, press the **SUBTITLE** button until the screen displays "SUBTITLE OFF ", The display of the subtitle options disappears automatically if you wait for three seconds.

Repeat DVD chapters and titles

To repeat a chapter or title, during playback continue pressing **REPEAT** to alternate among options.

- CHAPTER--- Repeats the current chapter.
- TITLE --- Repeats the current title.
- ALL--- Cycles play all chapters and titles
- REPEAT OFF--- Resumes normal playback.

Repeat favorite sections

To repeat a favorite section you must first mark where it begins and ends.

1. Play back the DVD.
2. To identify the beginning of your favorite section (point A), press the A-B button when the section starts playing back.
3. To identify the end of your favorite section (point B), press the A-B button again when play back reaches the end of the section.
   To cancel the repeat playback and resume normal playback, press the A-B button again.

Chang viewing angle

Note:
Multiple angles must be pre-recorded on the DVD .
Look for the multiple angles icon ( ) on the jacket of the DVD.

- To cycle through the available viewing angles, press the **ANGLE** button on the remote while playing back the DVD . The player displays the current angle number and the total number of angles available.
- To change the angle, press the **ANGLE** button again.
- To return to normal viewing, press the **ANGLE** button again.

Zoom in and out

- To zoom in (enlarge) the image when watching a DVD, press **ZOOM** during playback.
  As you press **ZOOM** on the remote, the player alternates among the available zoom settings (2x, 3x, 4x, 1/2, 1/3, 1/4).
- To zoom in when viewing photographs (JPEG/JPG images) stored on a disc , press **ZOOM** on the remote, the player alternates among the available zoom settings: ZOOM 100%, ZOOM 125%, ZOOM 150%, ZOOM 200%, ZOOM 75%, ZOOM 50%.

Play Audio CD disc

Display CD information

Insert a CD disc , the screen will display SINGLE ELAPSED . Continue pressing **DISPLAY** button to view SINGLE ELAPSED, SINGLE REMAIN, TOTAL ELAPSED, TOTAL REMAIN , DISPLAY OFF.

Repeat CD tracks

To repeat a track or the entire CD, press **REPEAT** button on the remote during playback.
To cycle through the available options, continue pressing **REPEAT**.

- TRACK --- Repeat play the current music
- ALL ---Cycles play all music
- REPEAT OFF ---Resume normal playback

Repeat favorite sections

To repeat a favorite section you must first mark where it begins and ends.

1. Play back the CD.
2. To identify the beginning of your favorite section (point A), press the **A-B** button on the remote when the section starts playing back.
3. To identify the end of your favourite section (point B), press the **A-B** button again when play back reaches the end of the section.
   To cancel the repeat playback and resume normal playback, press the **A-B** button again .

Play MP3 disc

MP3 is a format for storing digital audio, compresses each audio track with little loss of audio quality. The result takes up much less disc space than the track would without MP3 compression.

1. Insert a CD that contains MP3 files into the player .The player display the MP3 menu .

2. To select the folders and tracks to play, press the **ENTER** button. The player displays the folder structure.
3. To choose a folder from the list, press the ▲ / ▼ button.
4. Press the **ENTER** button, the player displays the contents of the selected folder.
5. To select the MP3 file, press the ▲ / ▼ button.
6. Press the **ENTER** button to play the file.

MP3 controls

- To play back to the next MP3 file, press the next button (▶▶|).
- To play back the previous MP3 file, press the previous button (|◀◀).

Repeat MP3

To repeat a single MP3 file, press the **REPEAT** button on the remote. To cycle ***through*** all the following settings , continue to press **REPEAT**.

- REPEAT ONE---repeats the current file.
- REPEAT ALL---cycles play all current of the disc .
- REPEAT FOLDER---repeats the current the folder.
- REPEAT OFF---turns off repeat and resumes normal playback.

Play USB device and SD/MMC card

- Insert a USB device into the USB socket of the main unit.
- On DVD mode, touch **SOURCE** button on the panel or press **SRC** button on the remote control for more than 2 seconds to switch to the USB mode. The system will play USB device automatically .
- Use the arrow buttons to select a file type and press enter to play it .
- Playing SD/MMC card is the same operation of USB device , please refer to the steps of playing USB device.

To use the FM transmitter for audio:

1. Press and hold the **MENU** button on the panel or press and hold the **MENU** button on the remote control to display OSD menu.
2. In the OSD MENU,press the ▼or ▲ button to select **FMT Freq** , then press the left(◀) or right(▶) arrows on the remote control or press ◀or ▶ button on the panel to change the frequency.
3. Exit the menu.
   Tune your FM radio to match the frequency set in step 0.1MHz . Audio from the player is now received by the FM radio.

Installation and Wiring

Do not attempt to install or service your player by yourself. Installation and servicing in electronic equipment and automotive accessories . If you do not have knowledge or experience this installation may be dangerous and could expose you to the risk of electric shock or other hazards.
Read these instructions and precautions carefully . Improper installation can damage the monitor and the vehicle .

What's in the box

In addition to this manual , the box contains :

Parts Name	Quantity
Player	1
IR remote control with battery	1
Power cable	1
AV 1 IN cable	1
AV 2 IN cable	1
AV OUT cable	1
ST 4.2x16 screw	8
PM 4x12 screw	4
User manual	1
Fortified pole	4
Connect panel	1

Note : *Use only the contents of this package to install and use the system. Using accessories not provided with this player may damage the player.*

Before you begin

- Verify that the vehicle electrical components function, including power windows, power door locks, air conditioning, lights, etc.
- Identify the polarity of the dome light circuit and set the switch on the bottom of the overhead monitor housing.
- Test fit the location of the overhead monitor system to ensure it will not interfere with the operation of the vehicle.

- If applicable, verify that the monitor, when mounted, will not interfere with the operation of the sun roof.
- Carefully mark the location with masking tape.
- Lower the vehicle's headliner down to see if a roof support beam is available to screw the mounting bracket to.

  If a support beam is not available, use a 3/4-inch piece of plywood cut to the appropriate size. Attach the plywood to the roof of the vehicle using silicone. Allow for adequate drying time.
- Determine the location of any additional audio/video sources.
- Disconnect the negative battery terminal before making any wiring connections.

Caution:*Do not open the case . There are no serviceable parts inside . If you drop anything into the unit during installation , consult with your Boss Dealer or an authorized Boss service center .*

Mounting and Wiring precautions

- This unit is exclusively for vehicles with a negative ground, 12V power supply.
- This unit may be installed with additional mobile audio components, such as a digital camera.
- Always use great care when attaching anything to a vehicle. Check clearances on both sides of the planned installation before drilling any holes or installing any screws.
- A good chassis ground connection is critical to minimize resistance and avoid noise problems. Use the shortest wire possible and securely connect it to the car chassis.
- When routing RCA cables, keep them away from the power cables and output speaker wires, engine, exhaust system, ect. Heat may damage wires.
- If the fuse should blow, make sure that all connections are correct, the cables have not caused a short circuit, and no wires are damaged.
- Then replace the fuse with a new fuse of the same amperage value as the original fuse. When replacing a fuse, never let the power cable touch any metal part or other wire.
- Never let disconnected cables or terminals touch metal on the car or any other conducting material.
- To prevent short circuit, do not remove the caps from unused terminals or from the ends of unconnected cables.
- Insulate unconnected wires with vinyl tape or other similar material.

Warning!

To prevent short circuits during installation, disconnect the vehicle's negative battery lead before making any power connections.

Installation procedure

1. Screw the Installation Bracket to the beam or plywood using the ST4.2x16 screws.
2. Installing the trim ring on the player using the TB 2.6x6 screws .
3. Plug in power harness and audio/video source cablesinto the overhead monitor .
4. Attach the player to the Installation Bracket using the PM4x12 .
5. Check the car's brake lights, blinkers, wiper, etc. to ensure they are working property.

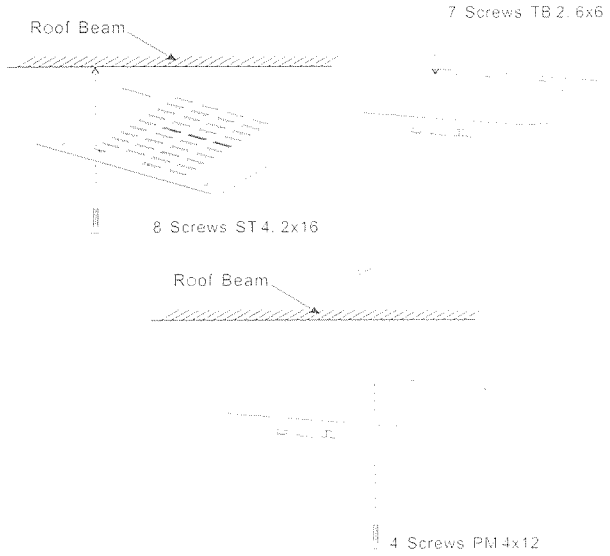

Wiring diagram

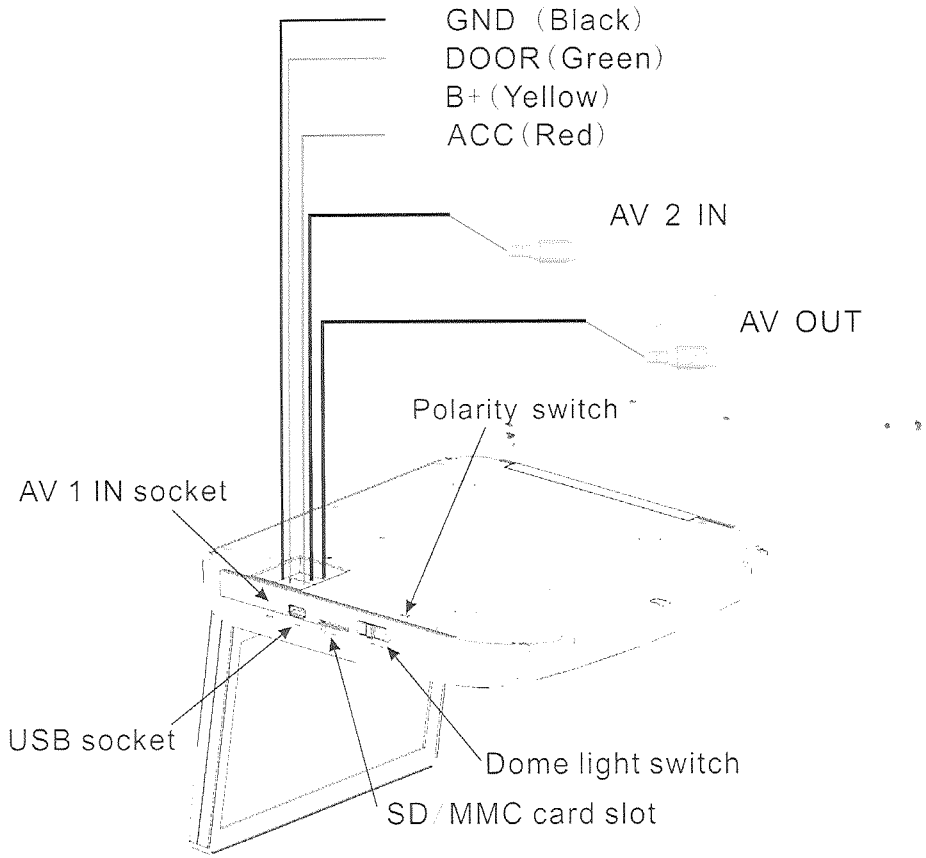

System Setup

1. Press **SETUP** on the remote control to access the setup menu.
2. Press ▲ / ▼ button to select among menu items.
3. Press ◄ / ► button to change the values of selected option .
4. Press ▲ / ▼ button to select the option you wish to change.
5. Press **ENTER** to confirm your selection.
6. Press ◄ to return the previous grade menu.
7. Press **SETUP** to exit the setup menu.

Menu	Description
GENERAL SETUP PAGE	**ANGLE MARK:** Turn the multiple-angle feature on or off , the multiple-angle must be prerecord on the DVD disc. • ON • OFF
	OSD LANG: Selects a language for menu. • ENGLISH • FRENCH • SPANISH • ITALIAN
	CAPTIONS: Selects the caption . • ON • OFF
	SCREEN SAVER: Protects the screen if it paused about 5 minutes. • ON • OFF
	LOGO TYPE: Selects different start LOGO picture. • DEFAULT • CAPTURED
SPEAKER SETUP PAGE	**DOWNMIX:** Applies to Dolby digital sound. • LT/RT • STEREO
PREFERENCE PAGE	**TV TYPE:** Selects the TV system . • PAL • NTSC
	AUDIO: Selects the audio track language. • ENGLISH • FRENCH • SPANISH • GERMAN • CHINESE • RUSSIAN • THAI
	SUBTITLE: Selects the language of the subtitles displayed on the screen. • ENGLISH • FRENCH • SPANISH • GERMAN • CHINESE • RUSSIAN • THAI • OFF
	DISC MENU: Selects the language of the current disc. • ENGLISH • FRENCH • SPANISH • GERMAN • CHINESE • RUSSIAN • THAI

	PARENTAL: Restricts the viewing of movies to children of appropriate age levels only. You can select 1 to 8. 1 KID SAF (safe for children) 2 G (general audience) 3 PG (parental guidance suggested) 4 PG 13 (some material unsuitable for children under 13) 5 PGR (some material unsuitable for children under 17) 6 R (some material unsuitable for under 17) 7 NC 17 (not recommended viewing for children under 17) 8 ADULT (Only for adults due to graphic content.This is the default setting .) After you select the parental setting, press ENTER, then enter the 4-digit password (default is 3308). Press ENTER again to confirm.
	PASSWORD: Lets you change the 4-digit password using the number keys on the remote control . The default password is 3308, but no longer works after you change the password.
	DEFAULT: Resets all settings to the factory defaults.

NOTE:

⚠After you input some pictures to the player as LOGO picture, select Captured in LOGO TYPE menu, then you can use SUBTITEL key on the remote control to change the start LOGO picture one by one. Select Default in LOGO TYPE menu to recover the default.

Specifications

Specifications and design are subject to change with out notice.

Power Source	Vehicle battery (DC +10V ~ +16V)
Operating Voltage	DC +14.4V
Mechanism	Manual Open / Close
Display Angle	Vertical Adjustable: Up/Down < 120°
Pixel	800x3(RGB)x480
High Brightness	350 cd/m^2
Viewing angle(up/down/left/right)	45/65/65/65
Operating current	<2000mA(Typical V_{DD}=14.4V)
Dome Light	<2W
Operation Temperature	-10°C to +50°C
Storage Temperature	-20°C to +70°C

Troubleshooting

If operation freezes, the screen goes black or the unit should otherwise not function properly, try turning the unit on and off. If the unit does not respond, press the reset switch on the Front Panel.

Problem	Cause	Solution
Player does not play disc	Disc inserted incorrectly	Reinsert the disc with the label side up (facing the ceiling).
	Disc format is not supported	Check the disc format.
	Disc is dirty or scratched	Clean or replace the disc.
The player suddenly stopped working or the screen went black	Player error	Try turning the player off and on. If the player still doesn't respond, press the reset button.
Player doesn't turn on	The car ignition (or ACC/Accessory) is off	Insert the key into the ignition and turn it to ACC/Accessory.

	Condensation in the player	Wait for about one hour or until condensation evaporates.
Player operates erratically	Battery needs replacing	Replace the battery.
	Dirty IR window on the Player or remote control	Clean the player's and the remote control's IR windows.
	Loose connections	Check and tighten all connections.
Picture Skips Occasions	Disc is dirty or scratched	Clean or replace the disc .
Blur picture on the screen.	Interfered by short-distanced strong interference. (E.g. high voltage wire, transformation station or aircraft etc...)	Move the vehicle away from the interference.
The picture on the screen is dark.	1. The equipment locates at a low temperature area. 2. Brightness is set too low.	1. This is the characteristics of LCD display in low temperature, it will restore to normal brightness after starting the display for few minutes. 2.Adjust the brightness setting.

Technical Assistance

If you need assistance setting up or using your Nakamichi product now or In the future,call Nakamichi Support.
Australia
TEL: 03-8587 8898
FAX: 03-8587 8866

Mon-Fri 9am -5pm AEST

Please retain this user guide for future reference.