EOSS

EMICSET

MANUAL

E-MIC

MICROPHONE SET

Table Arm Mount

Step 1

Tighten the C-clamp onto a desk or hard surface. Adjust the boom arm and tighten to required position

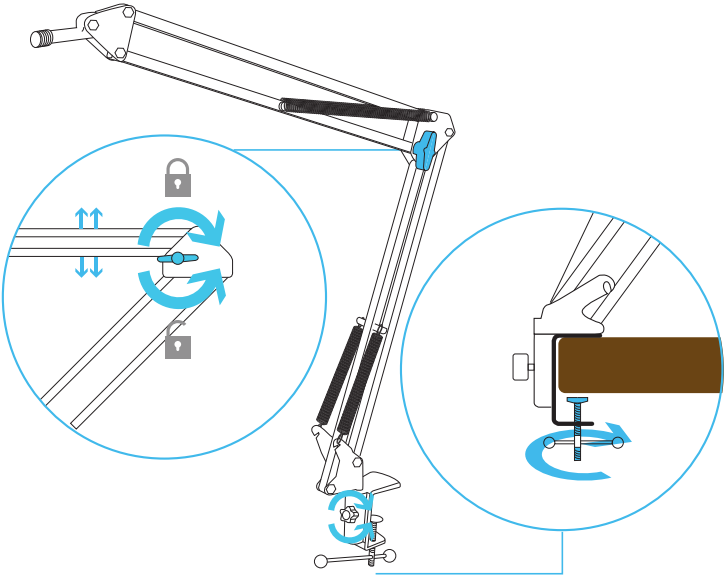

Attaching Shock mount

Step 2

Screw the shock mount to the boom arm. Then slide microphone into shock mount

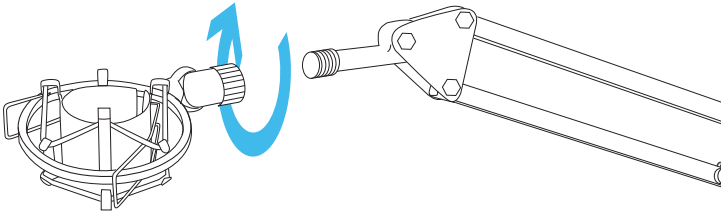

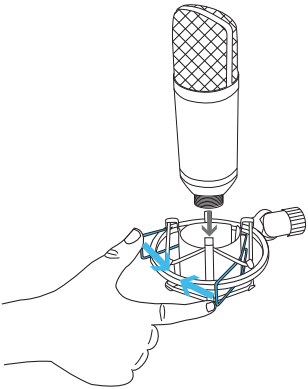

Connecting to a computer

Step 3

Plug USB into base of microphone and other USB end into a computer's USB input port

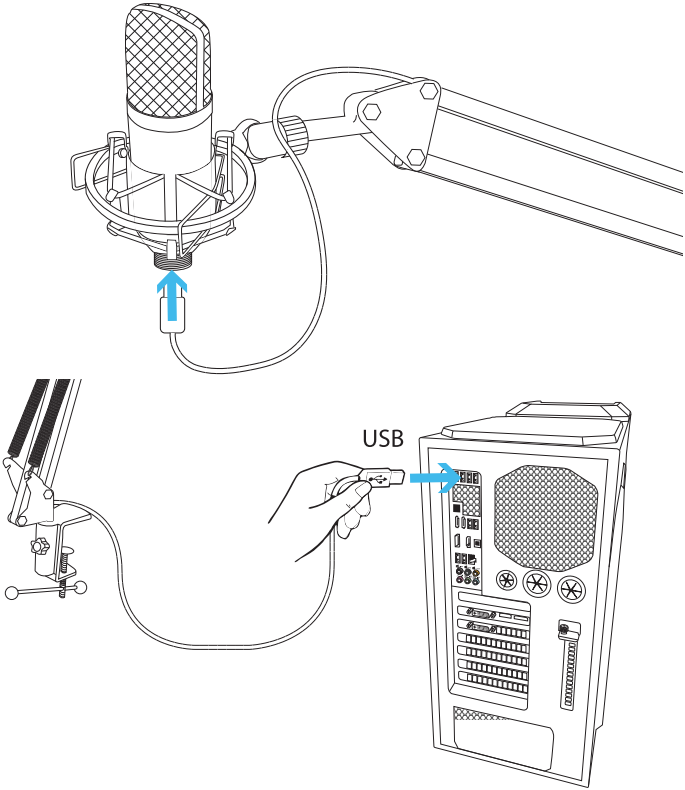

Attaching the filters

Step 4

Attach pop filter to the boom arm and tighten. Attach sock filter to microphone

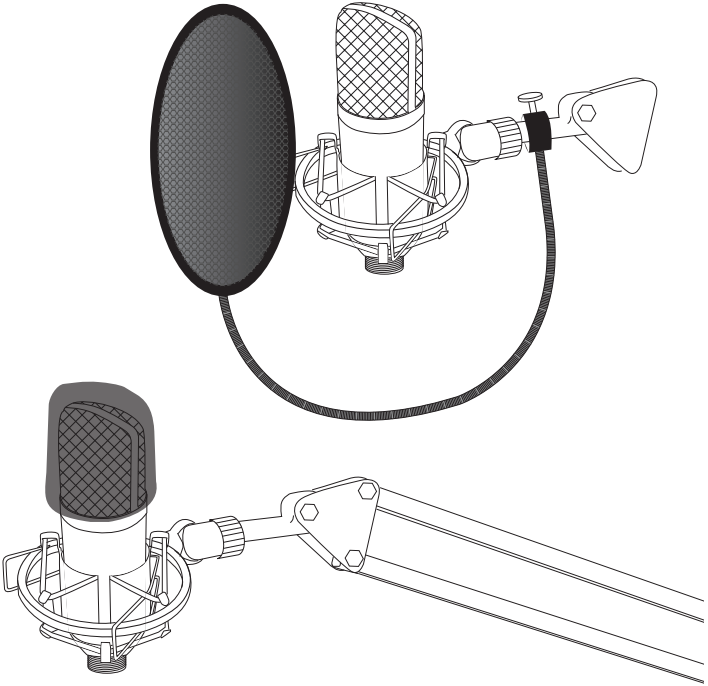

Additional Information

Selecting software
You have many choices in recording software. Audacity, available for free online at http://sourceforge.net is a widely used software program that provides basic recording software.

Setting your software levels
Correct adjustment of microphone level is important for optimum performance. Ideally, the microphone level should be as high as possible without overloading the input of your computer. If you hear distortion, or if your recording program shows levels that are consistently overloaded (at peak levels), turn the microphone volume (or level) down, either through your control panel (or system preferences) settings, or through your recording software. If your recording program shows insufficient level, you can increase the microphone gain either from the control panel (or system preferences) settings or through your recording program.

Positioning your microphone
It is important to position the microphone directly in line (on axis) with the person speaking/singing or instrument (or other sound source) to achieve the best frequency response of the microphone. This requires the user to speak into the microphone from the front side (EOSS logo) positioned towards the mouth. As this microphone is directional. The distance from the mouth should be about 1 inch, or 10 - 40mm for optimal recording. For use in speaking/singing applications, the ideal placement for the microphone is directly in front of the person speaking/singing The same placement is optimal when miking an instrument such as an acoustic guitar, drums or piano. Experiment with different mic placements to find the best sound for your particular setup.

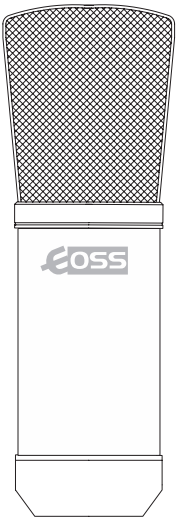

Specifications †

Power supply: Computer USB power
Direction: Cardioid
Frequency range: 20 - 20.000 Hz
Max SPL: 130 dB
Sensitivity: 34dB+2dB

S/N Ratio: 78dB
Output Impedance:150Ω±30%(at 1kHz)
Load impedance: ≥1000Ω
Cable length: 2 metres
Weight: 1030g

Features:

- High sensitivity, low noise and wide dynamic range
- Cardioid pickup to reduce unwanted noise
- Durable metal body/mesh grille
- Powered by USB cable
- Windows and Mac compatible, no drivers needed

System Requirements:

PC / Windows XP, Vista, 7, 8, 10 & Linux
MAC / OSX
† Specifications are subject to change without notice.

Inclusions:

1 x USB Microphone
1 x Table clamp microphone boom arm
1 x Microphone shock mount
1 x Pop filter
1 x Sock filter
1 x USB cable length: 2M

Technical Assistance

If you need assistance setting up or have an issue regarding the use of your EOSS product contact EOSS Customer Support.

Australian Agent
TEL: 03 – 8587 8898 FAX: 03 – 8587 8866
Mon-Fri 9am – 5pm AEST

This manual and product is considered correct at time of printing but is subject to change. For latest manuals and updates refer to the website. TDJ.com.au/help-downloads.