Aerpro®

CAM BUGGY

1:18 SCALE RACING ROCK CRAWLER SERIES

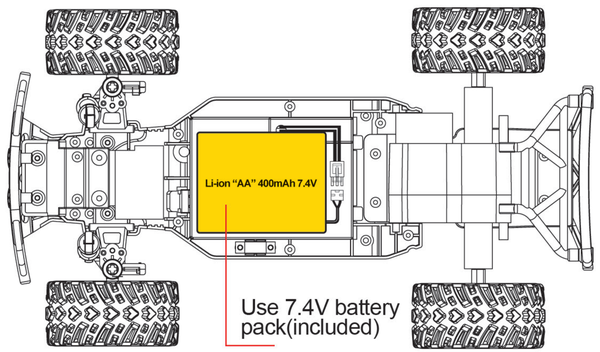

REMOTE CONTROL

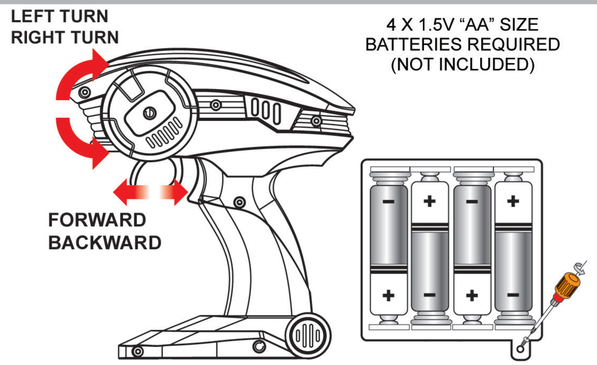

BUILT-IN CHARGER

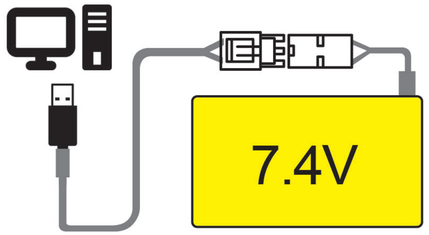

Use 7.4V battery pack

Charging the battery

Remove the battery from the RC car. Once the battery is fully disconnected, insert the connector of the battery into the USB charge cable and insert into a PC/Mac, laptop, or USB mains adapter. The red LED on the USB will light up whilst charging and a green LED will flash. Once fully charged both LED's will be solid. Always fully recharge battery once flat or before storing. Charge time approx 1.5 hours (source dependent).

WARNING:
CHOKING HAZARD-Small parts. Not for children under 3 years.

PRECAUCIONES:
PELIGRO DE AHOGARSE. Contiene partes pequeñas, no recomendado para niños menores de 3 años.

APBUGCAM

9 317114 930910

SPECIFICATIONS COLOURS AND CONTENTS MAY VARY FROM ILLUSTRATIONS

MADE IN CHINA